CYL.#	CRC-2369
SEAL KIT#	SK-2369
HEAD SEAL ITEM #1	(2) O-RING & B.U. (VITON)
PISTON SEAL ITEM #2	TEFLON /VITON STEPSEAL ASSEMBLY
PISTON SEAL ITEM #3	URETHANE/VITON WYNSEAL ASSEMBLY
WEAR RING ITEM #4	(2) GLASS FILLED NYLON WEAR RING
OTHER ITEM #5	(2) O-RING & B.U. (VITON) (@ BUTT PLATE)
TUBE	10"ID X 11-3/4"OD S355J2H HONED TUBE

CUSTOMER	WOMACK MACHINE SUPPLY CO. (HO)
ADDRESS	7807 BLUFF POINT DR., SUITE 140
	HOUSTON, TX 77086-1786
PHONE	713-955-6400
CONTACT	JIMMY VITULLI
SIZE	10" X 88.25"
MAX. OPERATING PRESSURE	1,500 PSI (TEST @ 2,250 PSI)
RETRACTED	108.88"
EXTENDED	XXXXX
WEIGHT	1,140 LBS. DRY

- NOTE: RED OXIDE PRIMER PAINT SUITABLE FOR ENAMEL TOP COAT.
- COMPONENT "A" TO HAVE NYE-TEF COATED ID.
- COMPONENT "B" & "D" TO BE "PARKERIZED".
- COMPONENT "C" TO BE "ANODIZED".
- ALL SEALS AND COMPONENTS "A", "B", "C", & "D" ARE COMPATIBLE WITH NITROGEN GAS AND WATER GLYCOL OPERATING FLUID.
  FLUID CONTAINS:
  54% ETHYLENE GLYCOL
  44% WATER
  2% ANTI-RUST ADDITIVES
- DIFFERENTIAL PRESSURE ON PISTON SHOULD BE LESS THAN 0.3 BAR (4.35 PSI) AT BREAKAWAY; PRESSURE IS NOT HIGHER THAN 20 BAR (290 PSI) FOR ANY PISTON POSITION IN ACCUMULATOR BODY EXCEPT THE CASES WHEN PISTON IS PRESSED TO THE UPPER OR BOTTOM LID.

- TEST:
  1) EACH CYLINDER WILL BE HYDROSTATIC PRESSURE TESTED TO 2,250 PSI.
  2) 10% OF ORDER WILL BE TESTED FOR PISTON BREAK-AWAY PRESSURE FOR ANY PISTON POSITION IN ACCUMULATOR BODY

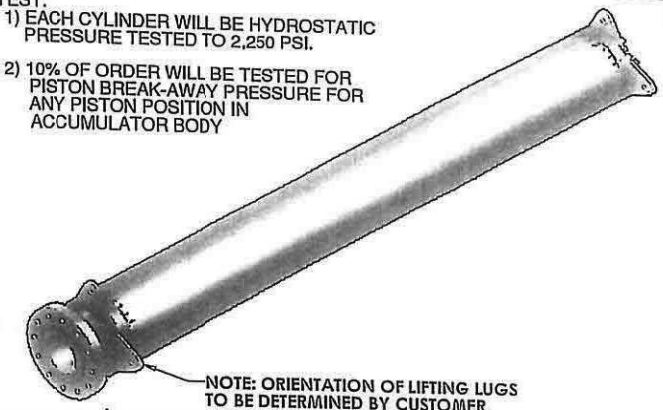

NOTE: ORIENTATION OF LIFTING LUGS TO BE DETERMINED BY CUSTOMER.

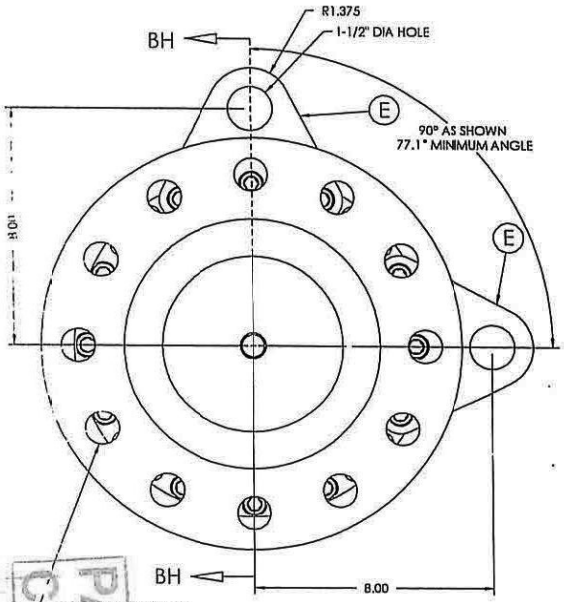

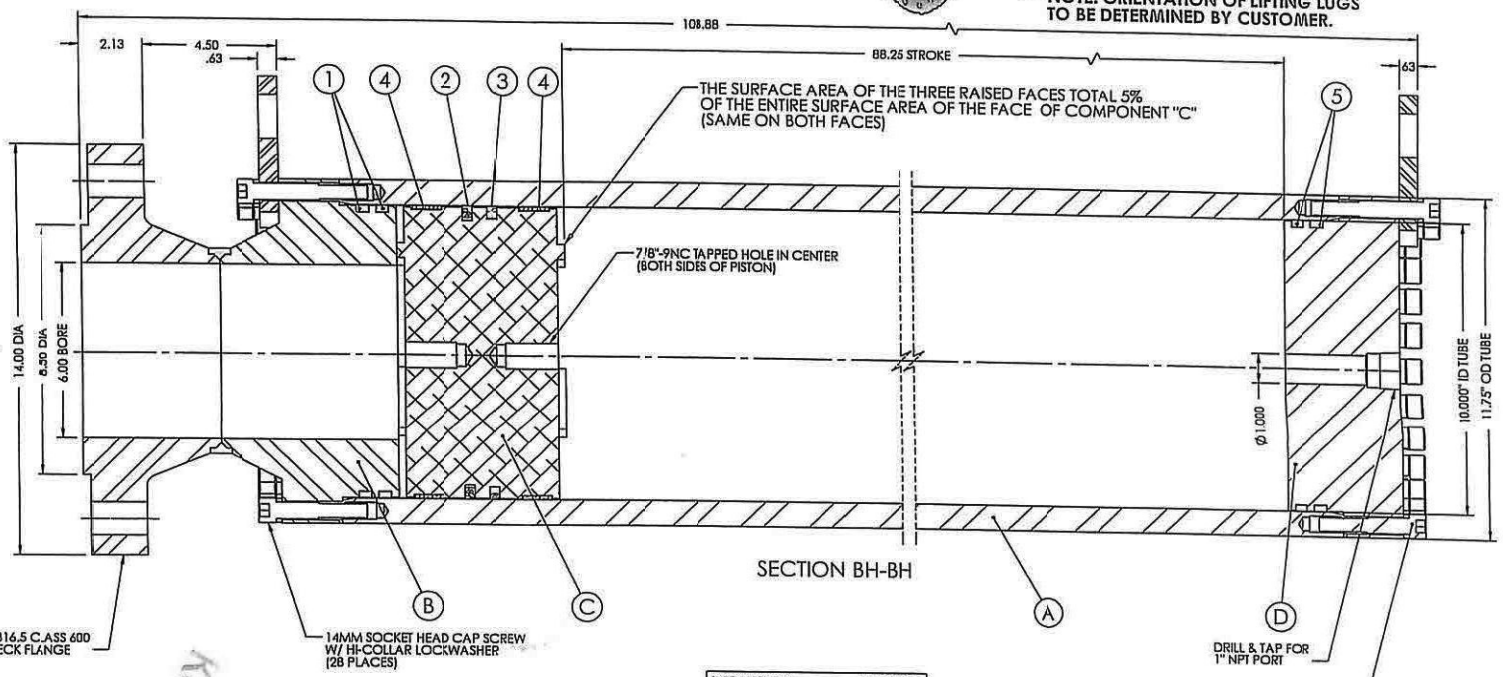

SECTION BH-BH

TUBE ASSEMBLY	CRC-2369-A
HEAD WELDMENT	CRC-2369-B
PISTON	CRC-2369-C
BUTT PLATE	CRC-2369-D
LIFTING LUG (4)	CRC-2369-E

UNLESS OTHERWISE NOTED

A		J.H	D.C.	07 29 10	NONE	HYDRAtech/CRC	
110					D.COMBS	22955 McAuliffe Drive	
					J. BUCK	Robertsdale, AL 36567	
					D. COMBS	DRAWING NUMBER CRC 2369	

CUSTOMER APPROVAL STAMP
☐ APPROVED
☐ APPROVED AS NOTED
☐ NOT APPROVED
DATE / /

P3DEL
CIP.

KONTRA BERPH «OGSB»

Reviewed
Passed
Date: 12.07.10
RU-0.44

NT

77

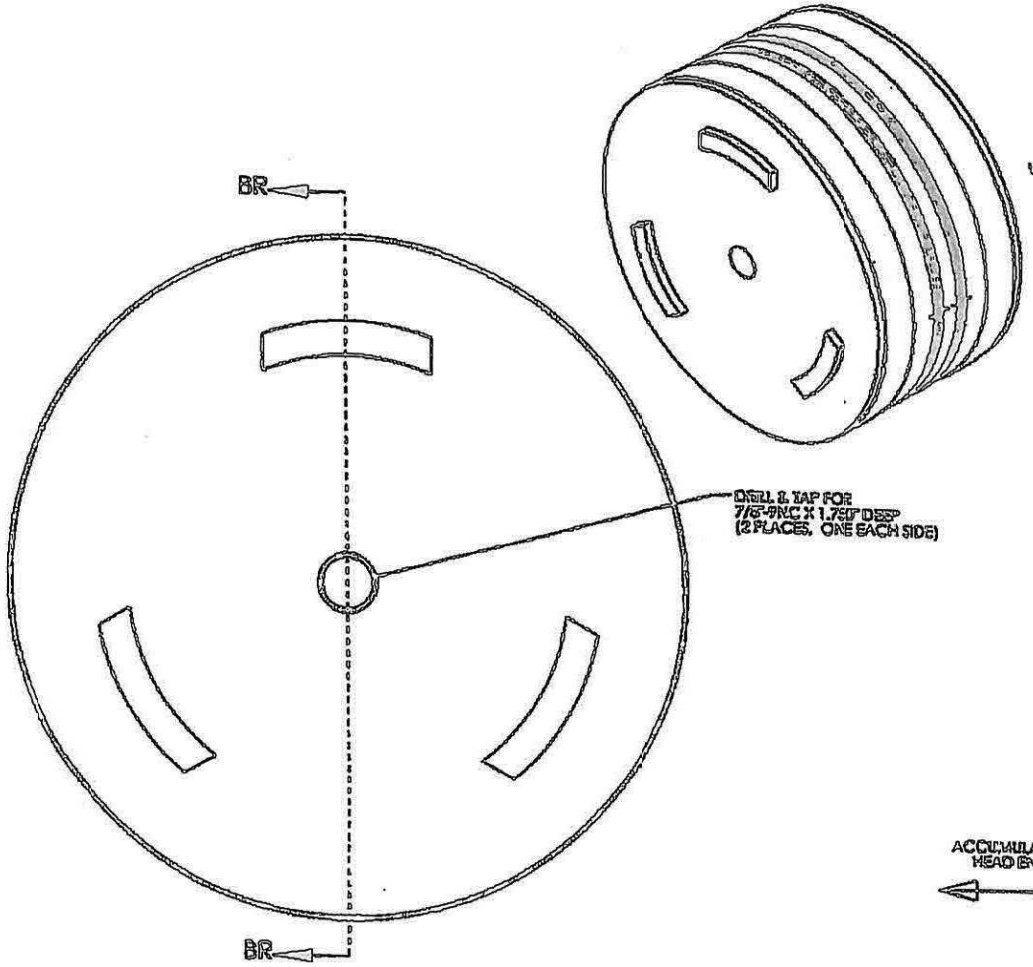

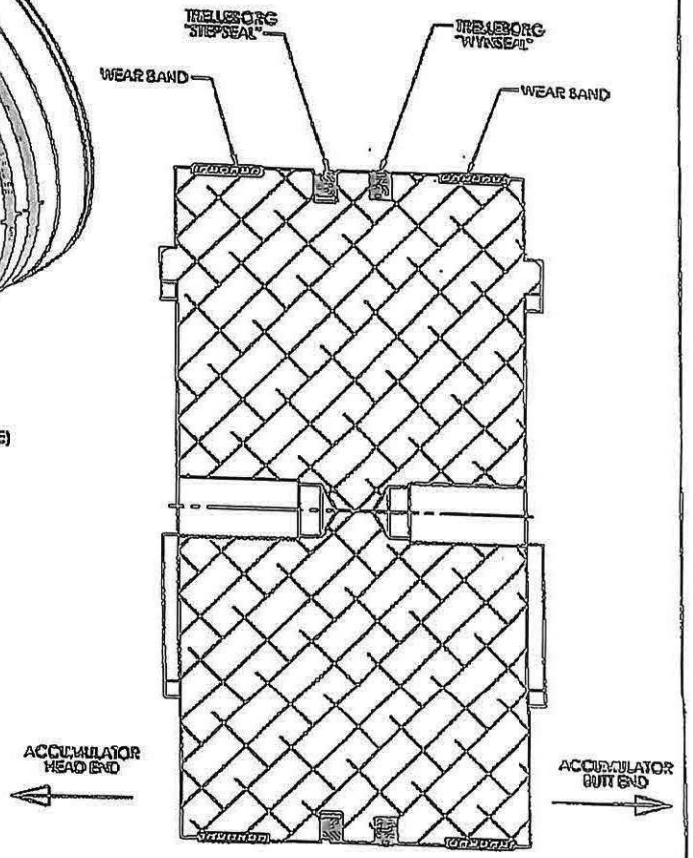

SECTION BR-BR

RELEASED FOR PRODUCTION
SHIP DATE: 02/09/2011
JOB #7236
QTY. 56 CYLINDERS

PISTON ASSEMBLY W/ SEALS
CRC-2369-C

UNLESS OTHERWISE NOTED							NONE
TOLERANCES	1 DO NOT SCALE DRAWING						D. COMBS
2 DIM ARE IN INCHES							J. BUCK
3 REMOVE ALL BURRS AND SHARP CORNERS							D. COMBS
4 INSIDE CORNER 0.031" R OUTSIDE CORNERS 0.020" R OR CHAM 0.030" x 45°		A		DH.	DC	08-12-10	DRAWING NUMBER
5 MACHINE FINISH		NO	SEE REV SHEET				CRC-2369

22955 McAuliffe Drive
Robertsdale, AL 36567

РАЗДЕЛ III-5
СТР. 2

«ОСЗВ ЕЕРН»